3H183G

Type	Rated RPM	Stand by (Kw / HP)	Prime (Kw / HP)
3H-S5D18G	1800	20 / 26.8	18 / 24.1
3H-S5D15G	1500	16 / 21.4	14 / 18.8

◎ GENERAL ENGINE DATA

▶ Emission Level	EEC : StageV, EPA : Tier4 Final, Korea : Tier4
▶ Engine Type	3-Cylinder, 4-Cycle, In-line, Diesel, Water cooled, N/A
▶ Bore x Stroke	Ø87×102.4 mm
▶ Displacement	1.826 liters
▶ Compression Ratio	18.3±0.2 : 1
▶ Combustor Type	Common Rail Direct Injection(CRDI)
▶ Rotation	Counter clockwise viewed from Flywheel
▶ Dimension (L x W x H)	835.3 x 562.8 x 708.9 mm
▶ Dry Weight	255kg (with Fan and plate type)
▶ High Idle Rpm	2750±50
▶ Low Idle Rpm	1030±50
▶ Aspiration	N/A
▶ Governor Type	Electric Control (ECU)
▶ Injection timing	Auto Control
▶ Alternator Capacity	12V-75A
▶ Firing order	1-2-3
▶ Flywheel housing	SAE No.4
▶ Flywheel	Clutch No.7-1/2
▶ After Treatment	CCRT(DOC+DPF)

Specifications are subject to change without prior notice

◆ ENGINE DIMENSION

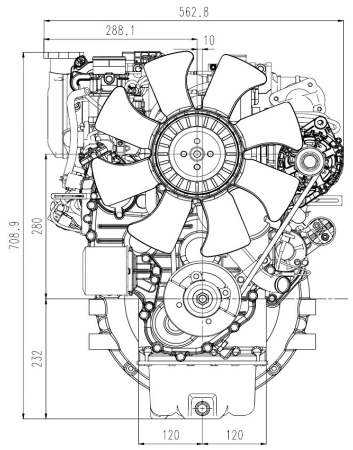

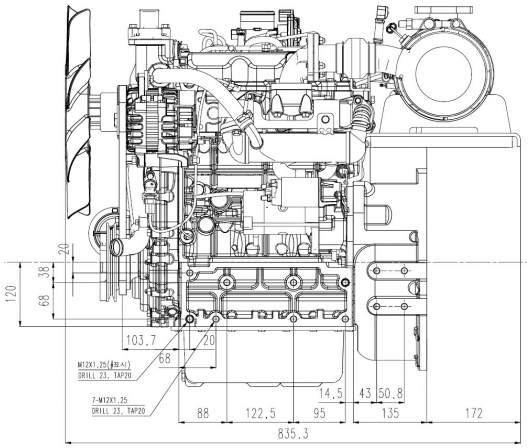

Designation	Length(L)	Width(W)	Height(H)	Dry weight
Value	835.3	562.8	708.9	255

Revised on Aug 5, 2020